Precision Devices

PD. 1550

FEATURES

The PD.1550 is a high power, high efficiency cone transducer designed specifically to provide powerful and accurate bass frequencies with minimum distortion and power compression. Research in the development of an advanced magnetic assembly which incorporates a composite alloy and steel pole piece giving a uniform and stable magnetic field, improving linear excursion and providing an efficient thermal path to dissipate the heat produced by the voice coil. The motor assembly generates a BL product of 26T/M which is exceptional for a transducer of this type. It is this approach which contributes to the speed, accuracy and fidelity of the unit and maintains control of the cone under the most demanding operating conditions. Manufacturing tolerances are extremely high and are combined with stringent quality control procedures whilst each component of the PD.1550 is selected to give exemplary electro-acoustic performance and long term reliability in all types of professional applications. The PD.1550 is suitable for both sound reinforcement and high power studio monitors in a variety of enclosure types since it allows enclosure designers considerably more freedom with specialised loading techniques without having to make the allowances for physical characteristics or power handling limitations which are typically the result of more traditional designs.

TECHNICAL SPECIFICATION

Nominal Diameter	38m (15”)
Power Rating [1]	500 Watts
Frequency Range	40 to 2000 Hz
Nominal Impedance	8 Ohms
Sensitivity [2] (1 W 1 M)	99 dB
Highest Recommended Crossover [3]	450 Hz
Resonance	31 Hz
Enc. Vol. Recommended	80 to 200 Litres
Effective Piston Diameter	336 mm (13.24”)
Displacement Limit	24 mm (0.94”)
Voice Coil Diameter	101 mm (4”)
Voice Coil	Copper
Voice Coil winding depth	22 mm (0.87”)
Voice Coil wire length	37.3 M (122.5”)
Magnet gap depth	10 mm (0.394”)
Magnet Material/Mass	Ceramic/3.0 Kg (6.63 Lbs.)
Magnet Assembly total Mass	10.9 Kg (24 Lbs.)
Flux Density	11,500 Gauss
BL Product	26.34 Tesla/M
Effective Moving Mass	123.4 grams
Connectors	Spring loaded push button
Polarity	Positive Voltage on Red Terminal gives forward cone motion.

Notes:

1. AES Standard (40 to 400 Hz) Program 1000 Watts.
2. Sensitivity is derived from the sine wave response between 60-450 Hz at 5W/2M using Zmin. It should be noted that not all manufacturers’ sensitivity figures are based on this AES Recommended Practice.
3. In less demanding applications, the crossover point may be higher.

RESPONSE & IMPEDANCE DETAILS

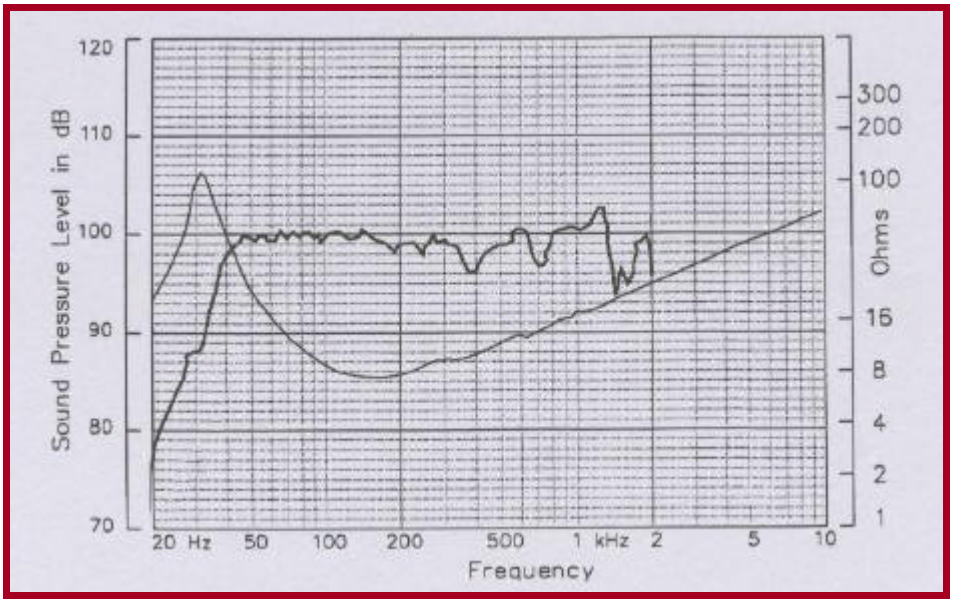

Response measured in half space environment using a vented enclosure of 107 litres.

MECHANICAL DATA

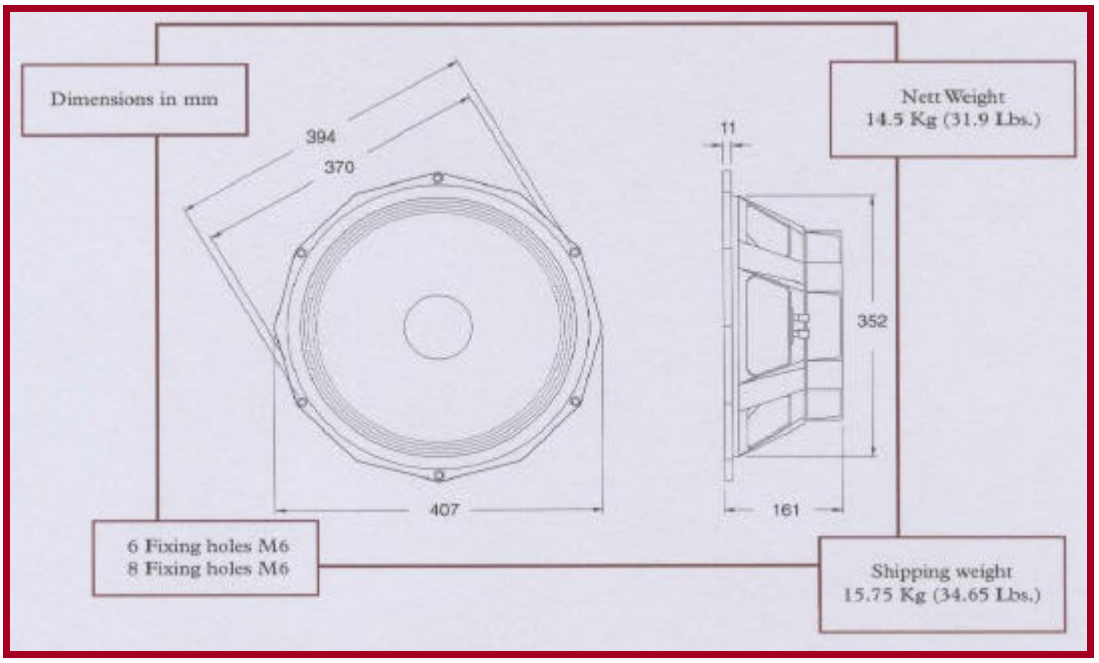

THIELE – SMALL PARAMETERS

Fs	31 Hz	**Pmx**	500 Watts.
Xmax	8 mm	**Qes**	0.22
Revc	6.4 Ohms	**Cms**	215 µM/N
Vd	$7x10^{-4}$ m^3	**Vas**	242 Litres
Qts	0.21	**Mms**	123.4 grams
No	3.14%	**Sd**	890 sq cm
Qms	5.55	**BL**	26.34 T/m

Notes 4. Thiele – Small Parameters follow a 500 Watt preconditioning period.

Precision Devices, Cardrew Industrial Estate, Redruth, Cornwall, TR15 1SS England.
Telephone: +44 (0)1209 310700 – Fax: +44 (0)1209 314378
Web Site: http://www.papl.co.uk – Email: infoat@papl.co.uk